Compact cross table with linear motor drive

High-precision positioning unit

Main features:

- Drive forces up to 264N for upper axis and 603N for lower axis
- Mechanical stroke up to 308mm
- Speed up to 1,5m/s
- Acceleration up to 30m/s^2
- Ironless linear motor: no attraction forces, no cogging forces
- Moving magnets for easier cabling (no moving cables to top part)
- One flat cable per axis for all connections
- Optical measurement system with integrated limit switches
- Precision cross roller rail guides with patented Anti cage Creeping System (ACS)
- Available in aluminum and cast iron
- Ideal suited for wafer processing and measurement applications



Dynamical and electrical parameters

	Stroke	mm (1)	92	164	236	308					
	Motor upper axis	Motor lower axis	Moving mass Al (GG25)								
			Kg (4)				Fp N (2)	Fn	Ip Aeff	In	Up Vp (2)
TLM300	.72		4,7 (11)	5,1 (11)	5,6 (12)		66	23	3,7	1,3	49
	.144		5,6 (12)	5,6 (12)	6,0 (12)		133	46	5,7	2,0	63
	.216		6,0 (12)	6,0 (12)	6,4 (13)		199	96	5,7	2,0	95
		.072	8,3 (20)	8,3 (20)	8,7 (20)		66	23	3,7	1,3	49
		.144	8,9 (20)	8,9 (20)	9,3 (21)		133	46	5,7	2,0	63
		.216	9,4 (21)	9,4 (21)	9,8 (21)		199	96	5,7	2,0	95
TLM400	.144			10 (25)	11 (25)	11 (26)	133	46	5,7	2,0	63
	.216			11 (25)	11 (26)	12 (26)	199	69	5,7	2,0	95
	.288			11 (26)	12 (26)	12 (27)	264	92	5,7	2,0	126
		.144		15 (37)	16 (38)	16 (38)	307	65	7,6	2,6	101
		.216		16 (38)	16 (38)	17 (39)	460	97	11,4	3,9	100
		.288		17 (38)	17 (39)	17 (39)	603	124	11,5	4,0	127

Note:

1. The indicated value is the mechanical stroke. The electrical stroke = mechanical stroke – 2x10mm. The electrical stroke is set with optical limit switches, integrated in the length measurement system. The linear motors have reduced propulsion forces when operating between the end switches and the end stop.

2. The displayed peak force, peak current and DC link voltage values should be multiplied by 1,2 to allow sufficient amplifier headroom. The displayed voltage U (DC link voltage) is valid for a speed of 1m/s at a force Fp.

3. GG25 is cast iron, to be used when maximum running accuracy and temperature stability is required (see also table below). To get the real moving mass of the lower axis, the top axis value should be added to the lower axis value.

4. The indicated value is the mechanical stroke. The electrical. Valid for the largest possible stroke, with the upper and lower axis both in centre position.

5. Valid for 100mm stroke. For 200mm stroke Tz +1 (1) and Ty +0,5 (0,25).

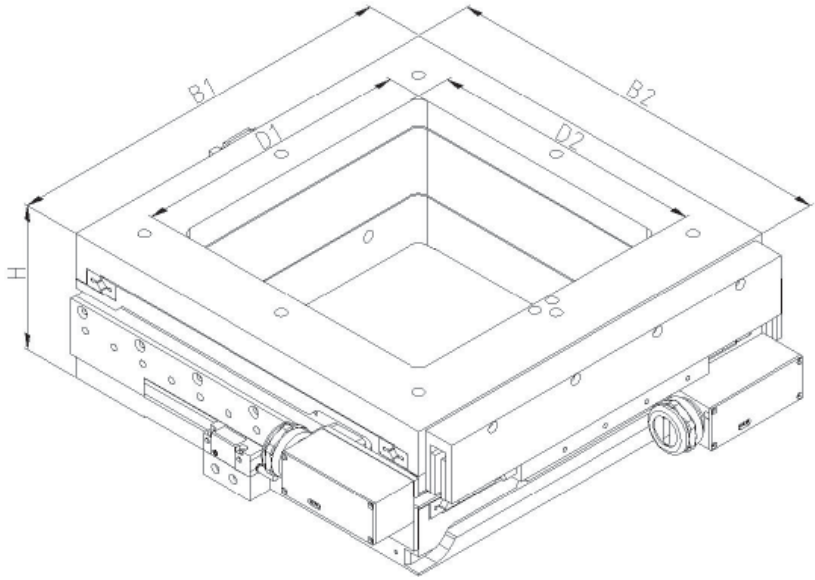

Position feedback and limit switches

The optical length measurement system has standard a pitch of 20µm and an output signal of 1Vpp. A TTL output signal with a resolution up to 0,1µm is available upon request. The standard accuracy class is 3µm. The integrated optical limit switches have a galvanic isolated PNP/NC (standard) or NPN/ NC output signal. The limit switch supply voltage is 10 - 30V DC. The limit switch position, as well as the measurement system status are indicated on the system by 3 LEDs per axis.

Mechanical parameters

Model	Weight bottom part Al (GG25)	Stage dimensions	Min. outer dimensions	Max. outer dimensions	Through hole dimensions	Height	Height/ Side accuracy Al (GG25)	Perpen-dicularity
		B1 x B2			D1 x D2	H	Tz / Ty	
	Kg	mm	(5)				µm(6)	mrad
TLM300	6 (16)	300 x 300	338 x 357	432 x 432	208 x 208	109	6 / 5 (5 / 4)	0,03
TLM400	13 (34)	400 x 401	438 x 468	576 x 576	275 x 255	145	6 / 5 (5 / 4)	0,03

SKF Linearsysteme GmbH
DE-97424 Schweinfurt, Germany
E-mail guidings@skf.com

Publication **Lf29EN 2/0505**

® SKF is a registered trademark of the SKF Group.

© SKF 2005
The contents of this publication are the copyright of the publisher and may not be reproduced (even extracts) unless prior written permission is granted. Every care has been taken to ensure the accuracy of the information contained in this publication but no liability can be accepted for any loss or damage whether direct, indirect or consequential arising out of the use of the information contained herein.